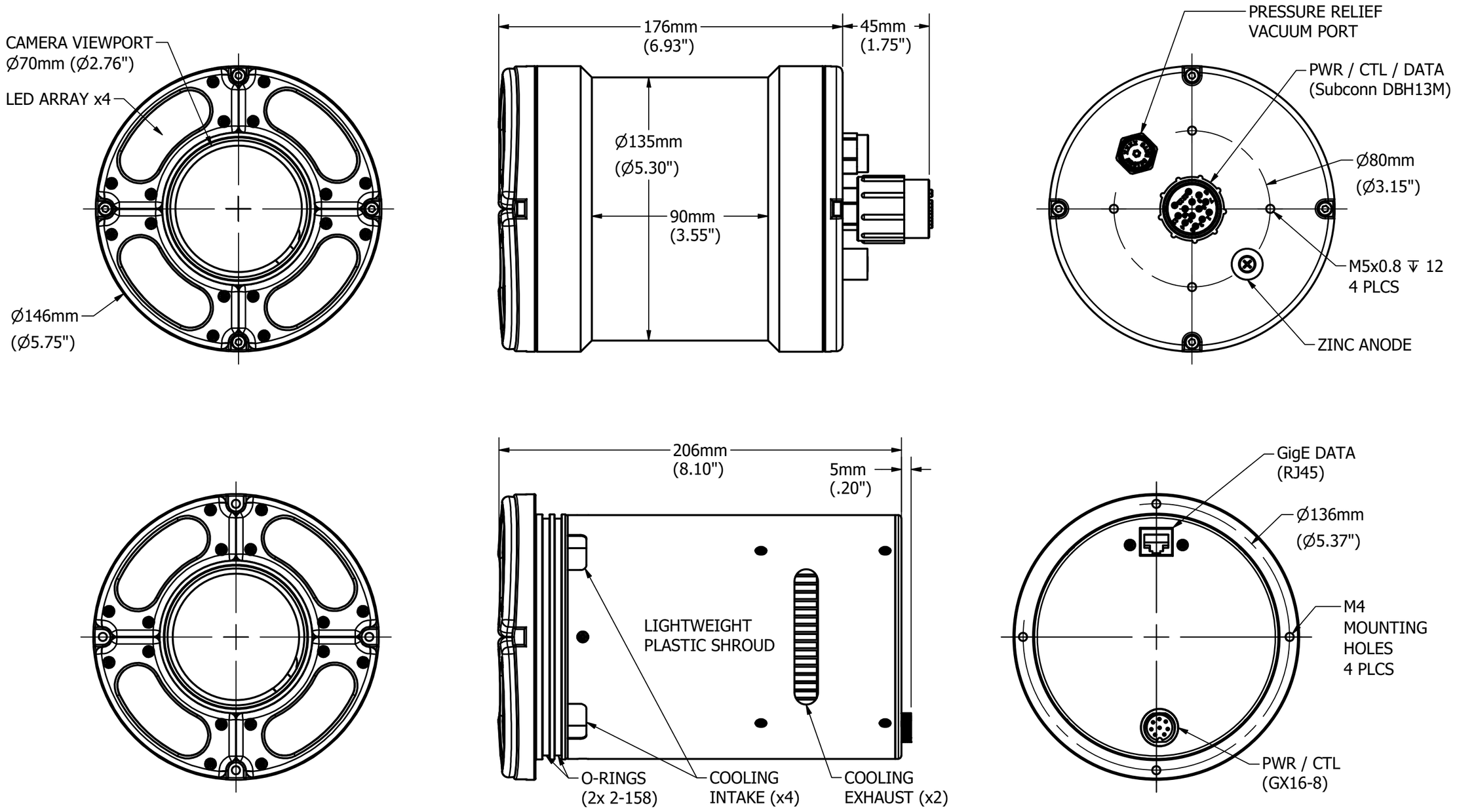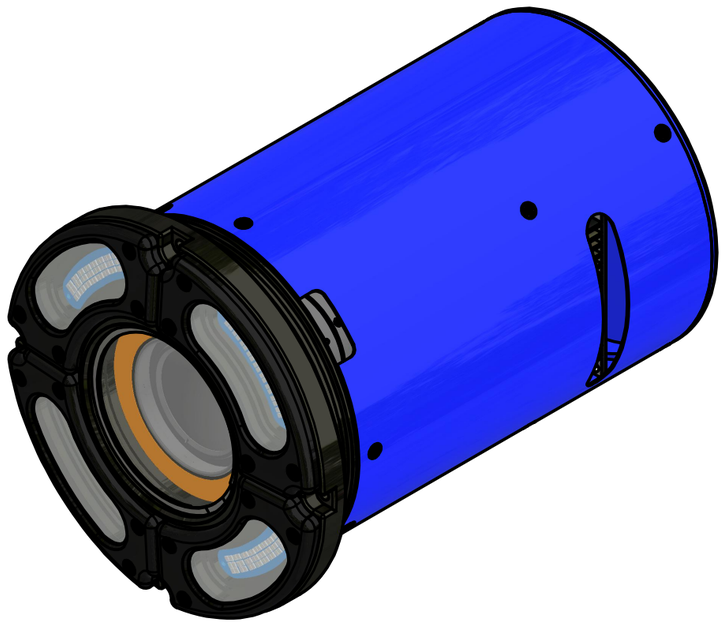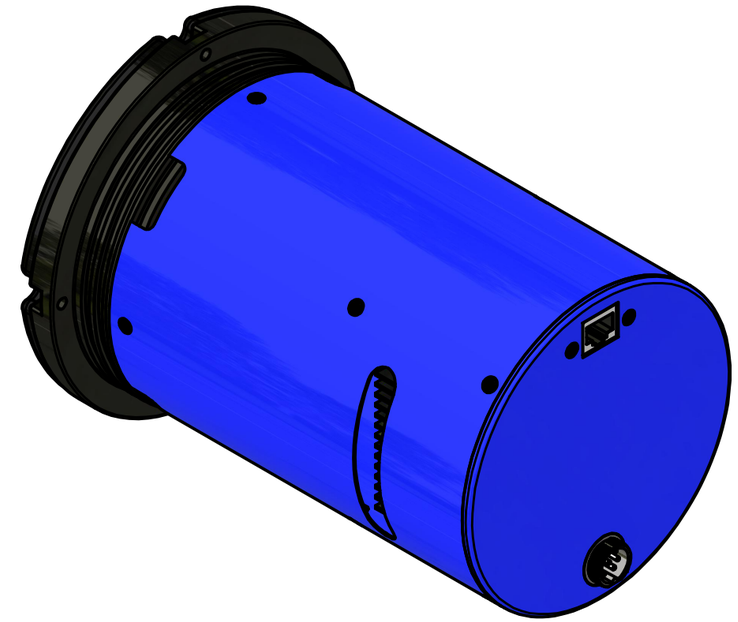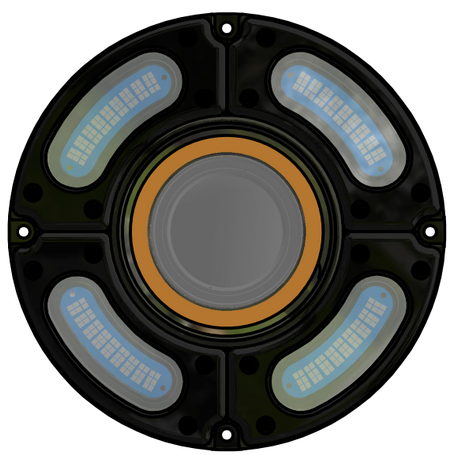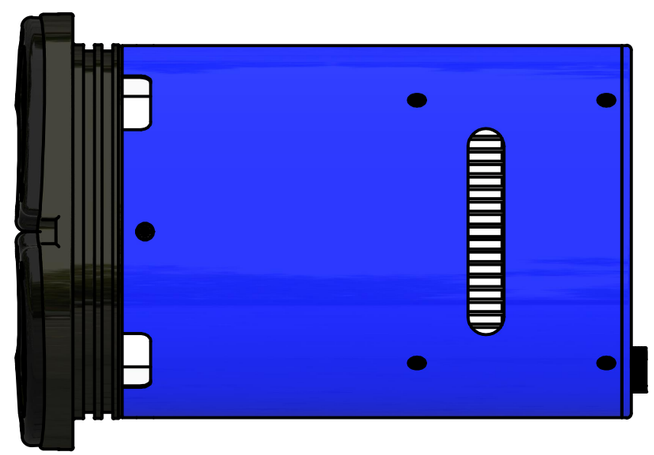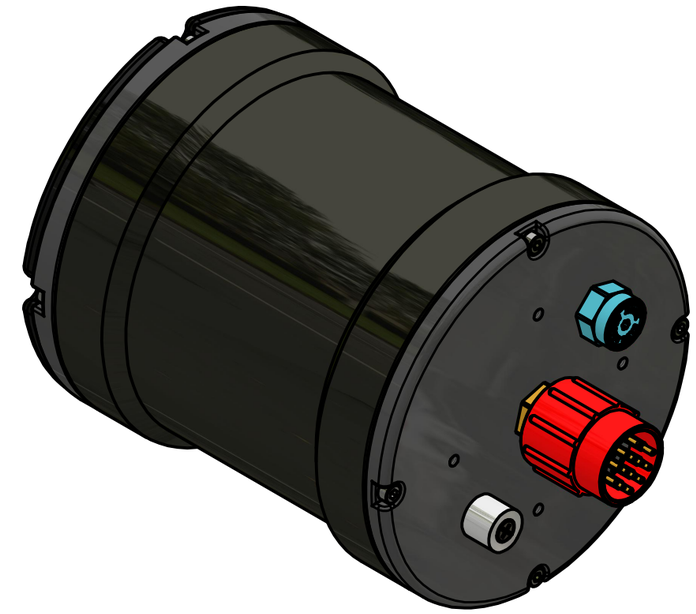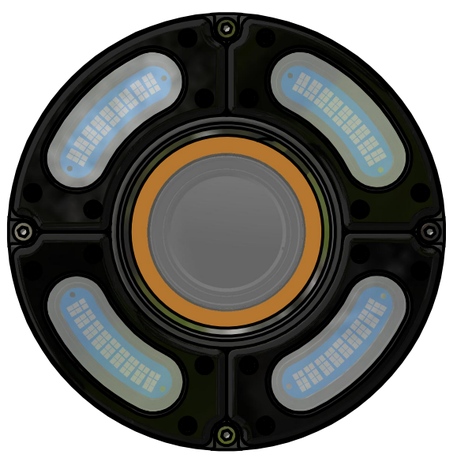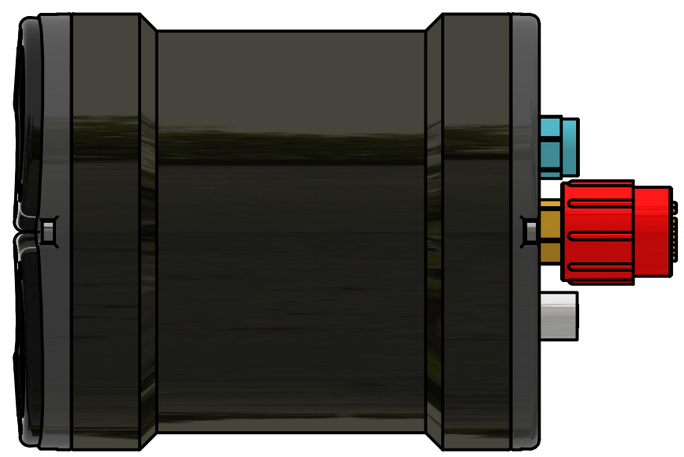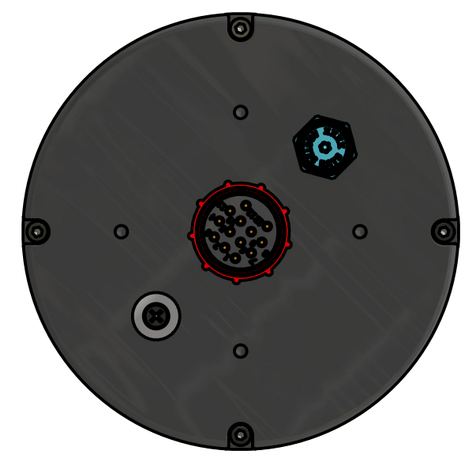
CAMERA VIEWPORT
Ø70mm (Ø2.76")
LED ARRAY x4
Ø146mm
(Ø5.75")
176mm
(6.93")
45mm
(1.75")
Ø135mm
(Ø5.30")
90mm
(3.55")
PRESSURE RELIEF
VACUUM PORT
PWR / CTL / DATA
(Subconn DBH13M)
Ø80mm
(Ø3.15")
M5x0.8 ↧ 12
4 PLCS
ZINC ANODE
206mm
(8.10")
5mm
(.20")
LIGHTWEIGHT
PLASTIC SHROUD
O-RINGS
(2x 2-158)
COOLING
INTAKE (x4)
COOLING
EXHAUST (x2)
GigE DATA
(RJ45)
Ø136mm
(Ø5.37")
M4
MOUNTING
HOLES
4 PLCS
PWR / CTL
(GX16-8)